DIMENSIONS TABLE

UNIT : inch

NOMINAL SIZE		d	ANSI Class150 D	C	n	h	D2	D3	E	L GRINNEL STANDARD	L AV STANDARD	t	l (LIFT)	H	H1	A3	S	S1	S2	P
1½"	40mm	1.57	5.00	3.88	4	0.62	4.25×4.25	7.24	6.06	6.94	7.09	0.63	0.71	9.37	1.08	3.35	1.77	0.35	0.59	¼
2	50	20.5	6.00	4.75	4	0.75	4.84×4.84	7.24	6.06	7.94	8.27	0.79	0.79	10.0	1.42	3.35	1.77	0.35	0.59	¼

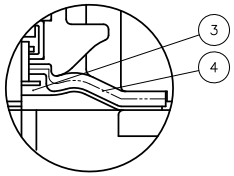

In case material of diaphragm is PTFE

NOTE.
1. Operation of permission pressure : 0.4~0.6MPa G
2. Double Acting : Valve open : Port (a) Exhaust
   Port (b) Supply
   Valve shut : Port (a) Supply
   Port (b) Exhaust
3. The shape and appearance of assembly differ a little with nominal size compared to this drawing.

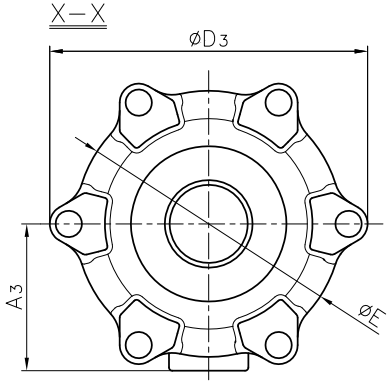

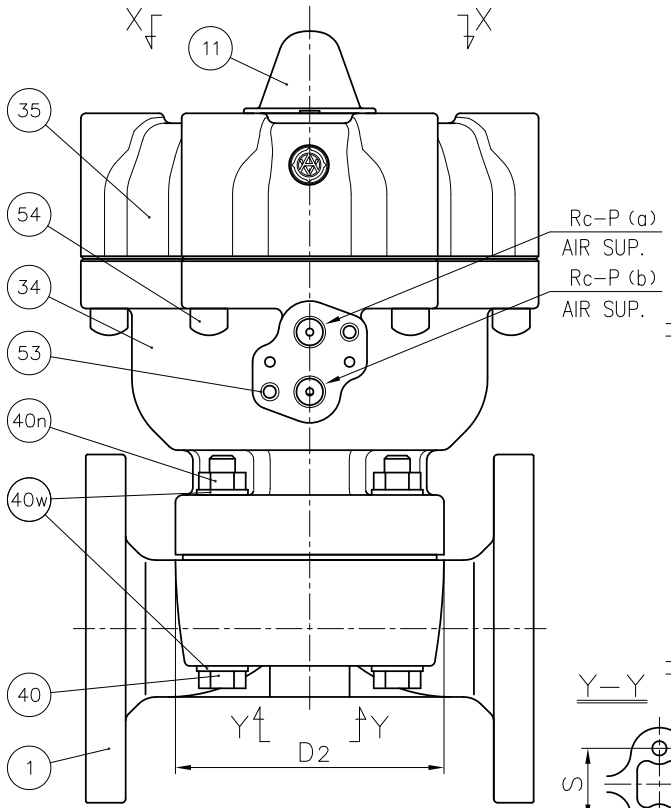

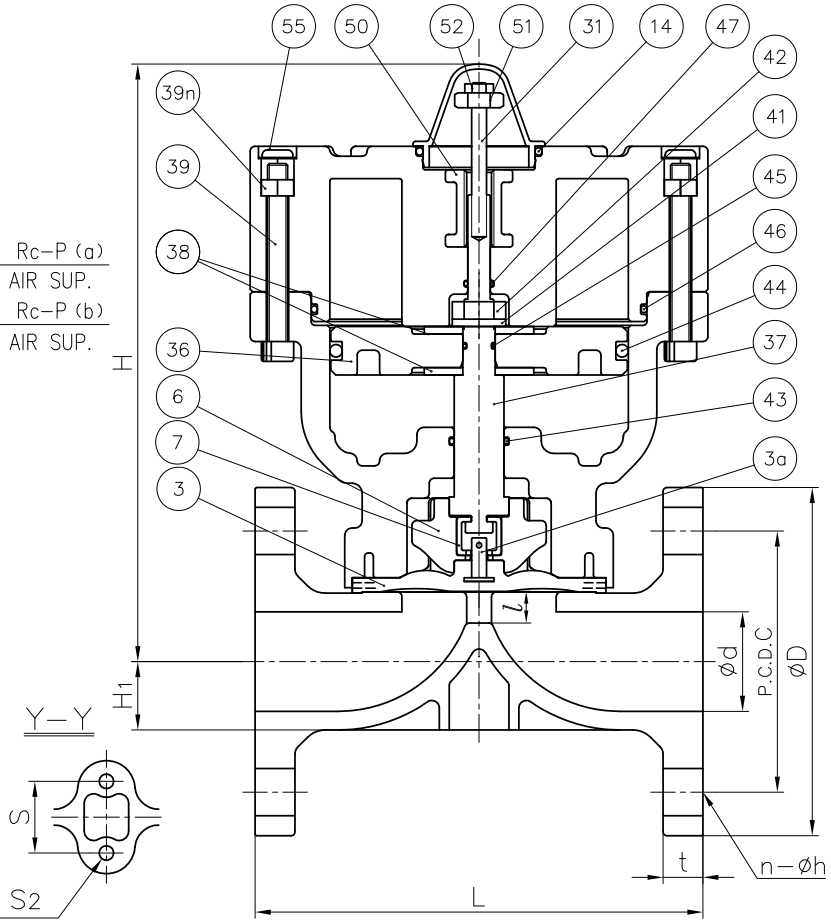

No.	DESCRIPTION	QTY.	MATERIAL	REMARKS
55	CAP	6	EPDM	Blue
54	CAP FOR HEXAGON SOCKET HEAD CAP SCREWS	6	PVC	
53	INSERTED METAL OF CYLINDER BODY	2	STAINLESS STEEL (SUS303)	
52	NUT (No.52)	1	STAINLESS STEEL (SUS304)	
51	SUTOPPER FOR PNEUMATIC ACTUATOR	1	STAINLESS STEEL (SUS304)	
50	INSERTED METAL OF CYLINDER COVER	1	STAINLESS STEEL (SUS304)	
47	O−RING (No.47)	1	NBR	
46	O−RING (No.46)	1	NBR	
45	O−RING (No.45)	1	NBR	
44	O−RING (No.44)	1	NBR	
43	O−RING (No.43)	1	NBR	
42	NUT (No.42)	1	STAINLESS STEEL (SUS304)	
41	SPRING WASHER	1	STAINLESS STEEL (SUS304)	
40n	NUT (No.40)	4	STAINLESS STEEL (SUS304)	
40w	WASHER (No.40)	8	STAINLESS STEEL (SUS304)	
40	BOLT (No.40)	4	STAINLESS STEEL (SUS304)	
39n	NUT (No.39)	6	STAINLESS STEEL (SUS304)	
39	BOLT (No.39)	6	STAINLESS STEEL (SUS304)	
38	WASHER (No.38)	2	STAINLESS STEEL (SUS304)	
37	STEM FOR PNEUMATIC ACTUATOR	1	COPPER ALLOY (C3604)	
36	PISTON	1	PPG	
35	CYLINDER COVER	1	PPG	
34	CYLINDER BODY	1	PPG	
31	INDICATOR ROD	1	STAINLESS STEEL (SUS304)	
14	O−RING (No.14)	1	EPDM	
11	GAUGE COVER	1	PC	
7	JOINT	1	STAINLESS STEEL (SUS304)	
6	COMPRESSOR	1	PVDF	
4	CUSHION	1	EPDM	Used for PTFE Diaphragm
3a	INSERTED METAL OF DIAPHRAGM	1	STAINLESS STEEL (SUS304)	
3	DIAPHRAGM	1	□EPDM □PTFE □Other ( )	
1	BODY	1	□PVC □C−PVC □PP □PVDF	

ITEM	DIAPHRAGM VALVE PNEUMATIC ACTUATED MODEL TYPE AI ASS'Y DOUBLE ACTING ANSI Class150 : FLANGED END 1½" (40mm) · 2" (50mm) □A STANDARD, □G STANDARD		
DRAWN	E.Emmei	DATE	SCALE
CHECKED	H.Kawano	DEC.19.2018	~
APPROVED	K.Koushou	DRAWING No. D1−AA102AE	6
SPECIAL ORDER No.		ASAHI YUKIZAI CORPORATION	