80mm (3") ~150mm (6")

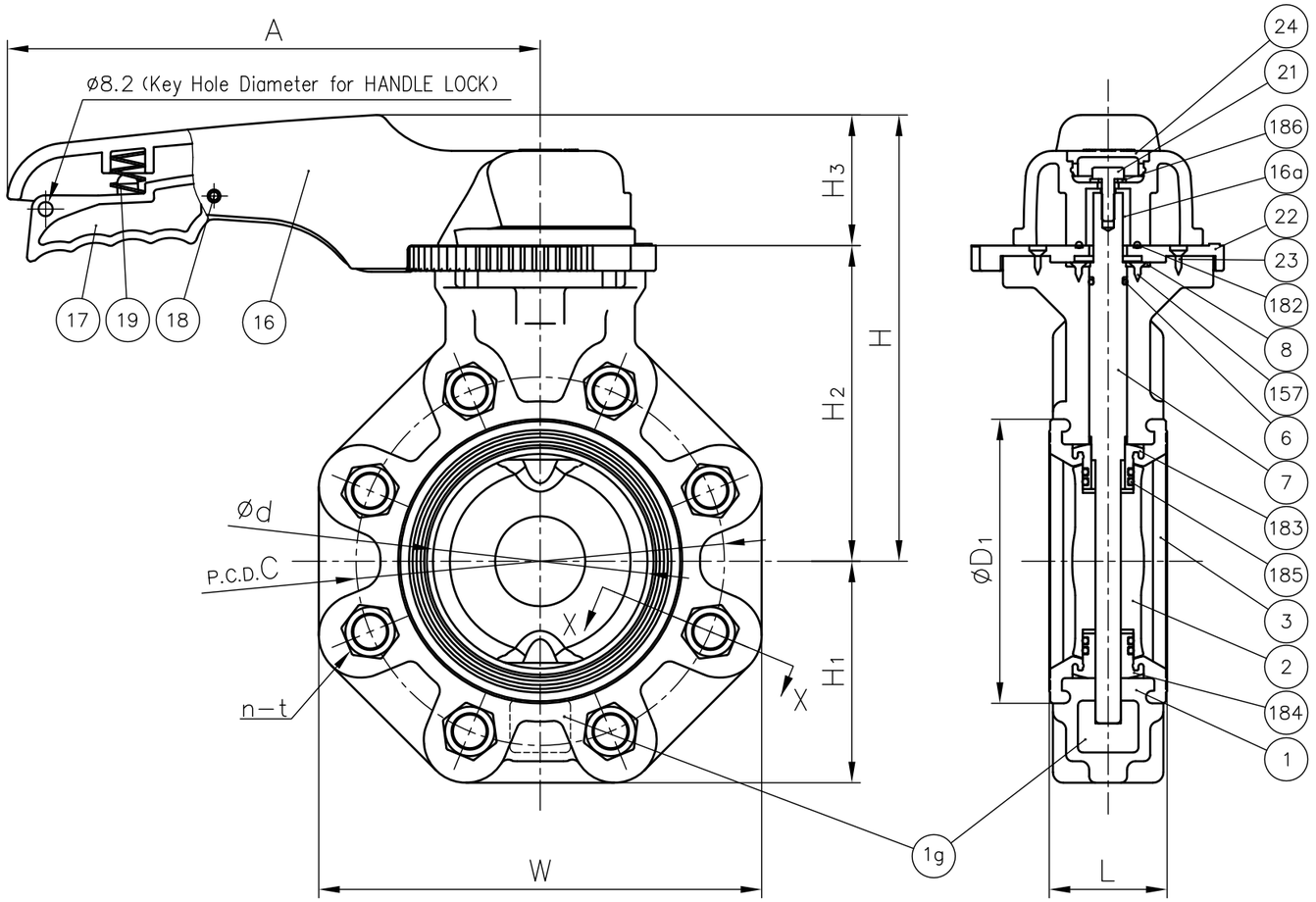

200mm (8")

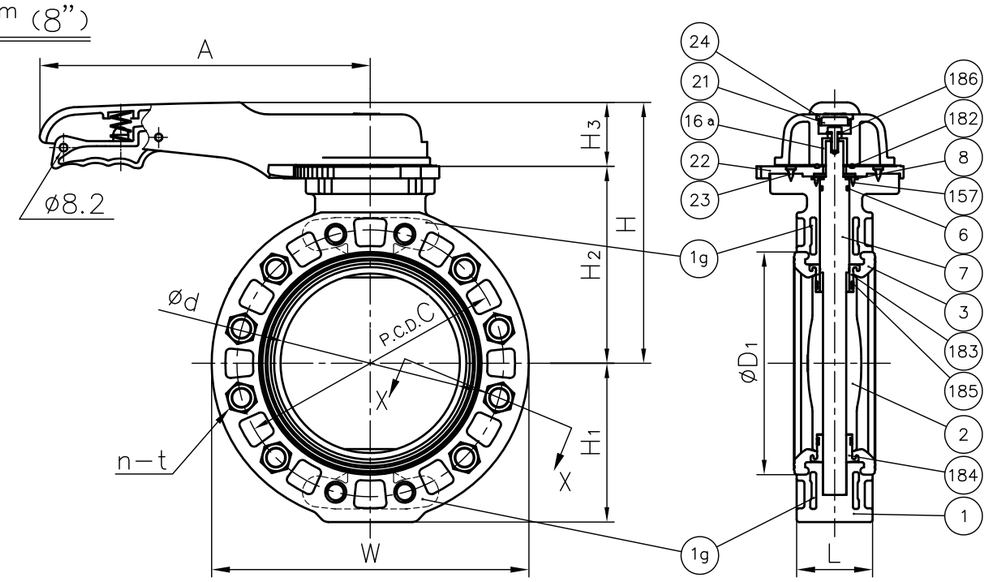

X−X

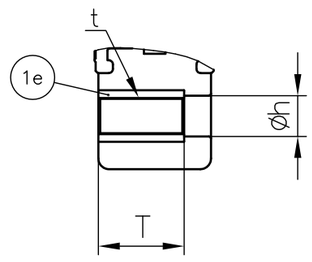

No.	DESCRIPTION	QTY.	MATERIAL	REMARKS
186	RUBBER+WASHER	1	STAINLESS STEEL (SUS304) +EPDM	
184	SEAT BUSH (B)	1	□PP □PVDF	
183	SEAT BUSH (A)	1		
182	O−RING (H)	1	EPDM	
157	SCREW (F)	4	STAINLESS STEEL (SUS304)	
24	CAP (A)	1	PP	
23	SCREW (B)	4	STAINLESS STEEL (SUS304)	
22	LOCKING PLATE	1	PPG	
21	BOLT (B)	1	STAINLESS STEEL (SUS304)	
19	SPRING	1	STAINLESS STEEL (SUS304)	
18	PIN	1	PPG	
17	HANDLE LEVER	1	PPG	
16a	HANDLE INSERTED METAL	1	STAINLESS STEEL (SUS316L)	
16	HANDLE (A)	1	PP	
8	STEM HOLDER (A)	1	PP	
7	STEM	1	STAINLESS STEEL (SUS403)	
185	O−RING (I)		□EPDM □FKM □FKM−F □FKM−C	
6	O−RING (C)	1		
3	SEAT	1		
2	DISC	1	□PP □PVDF	
1g	BODY−INSERT	1	STAINLESS STEEL (SUS304)	Used for 125,150mm
		2	STAINLESS STEEL (SCS13)	Used for 200mm
1e	LUG−INSERT	8	STAINLESS STEEL (SUS304) (Antiscoring coat)	
1	BODY	1	PDCPD	

DIMENSIONS TABLE

Unit : mm

Nominal Size mm	Nominal Size inch	d	JIS 10K C	JIS 10K n	JIS 10K h	D1	L	H	H1	H2	H3	A	W	T	t
80	3	77	150	8	19	105	46	191	94	135	56	250	193	40	M16×40 width across fat 24
100	4	102	175	8	19	134	56	206	105	150	56	250	217	40	M16×40 width across fat 24
125	5	129	210	8	23	169	66	237	124	168	69	320	247	50	M20×50 width across fat 30
150	6	150	240	8	23	190	71	252	138	183	69	320	285	50	M20×50 width across fat 30
200	8	195	295	12	23	242	87	283	173	214	69	400	345	60	M20×60 width across fat 30

NOTE. The shape and appearance of assembly differ a little with nominal size compared to this drawing.

ITEM	LUG−BUTTERFLY VALVE TYPE 57L ASS'Y LEVER TYPE : JIS 10K 80mm (3") ~ 200mm (8")		
DRAWN	S.Yamashita	DATE JUN.29.2010	SCALE ~
CHECKED	H.Kawano	DRAWING No.	
APPROVED	Y.Ozaki	LG−M1002JE	4
SPECIAL ORDER No.	ASAHI YUKIZAI CORPORATION		