DIMENSIONS TABLE

UNIT : inch

NOMINAL SIZE		d	ANSI Class 125 C	h	N Number of Standard Bolt Holes	n Number of through Bolt Holes	n1 Screw Holes One Side	n1 Screw Holes Totale	M	B	ANSI Class 150 C	h	N Number of Standard Bolt Holes	n Number of through Bolt Holes	n1 Screw Holes One Side	n1 Screw Holes Totale	M	B	D	D_1	D_3	L	H	H_1	H_2	H_3	H_4	H_5	I	A	A_2	A_3	A_4	A_5	ACTUATOR TYPE
28"	700mm	26.38	–	–	–	–	–	–	–	–	34.00	1.38	28	24	4	8	1¼	1.57	36.54	29.92	–	8.11	28.35	23.19	23.23	18.03	6.30	8.11	41.26	7.32	5.75	20.51	7.60	22.44	LTMD-02/BRM-10
32	800	30.31	–	–	–	–	–	–	–	–	38.50	1.62	28	24	4	8	1½	1.97	40.71	34.25	11.42	9.45	35.12	24.37	24.41	20.00	6.89	8.11	44.41	7.32	17.40	26.02	7.60	26.93	LTMD-05/BRM-10
36	900	34.25	42.75	1.62	32	28	4	8	1½	1.77	–	–	–	–	–	–	–	–	45.98	38.50	11.42	9.45	38.46	27.72	27.76	20.00	6.89	8.11	47.68	7.32	17.40	27.13	7.60	26.93	LTMD-05/BRM-10
40	1000	38.19	–	–	–	–	–	–	–	–	47.25	1.62	36	32	4	8	1½	2.56	49.69	42.52	11.42	11.81	41.65	29.49	29.53	21.42	6.89	10.16	50.94	8.66	18.94	29.33	9.29	28.46	LTMD-05/BRM-18

NOTE. The shape and appearance of assembly differ a little with nominal size compared to this drawing.

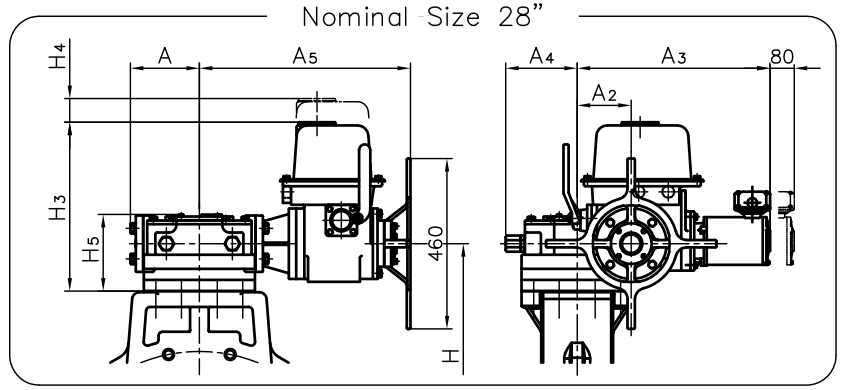

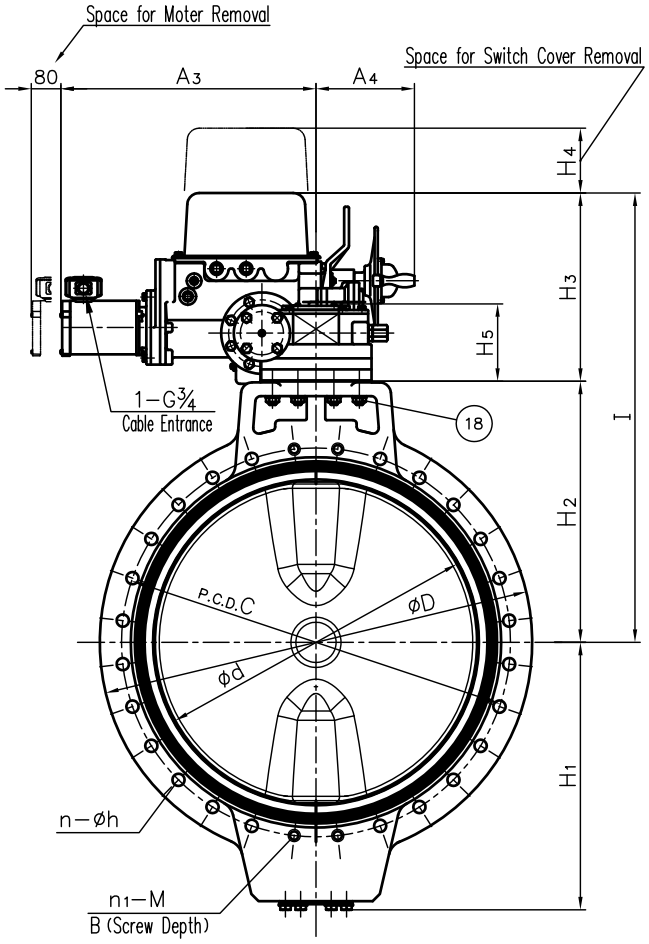

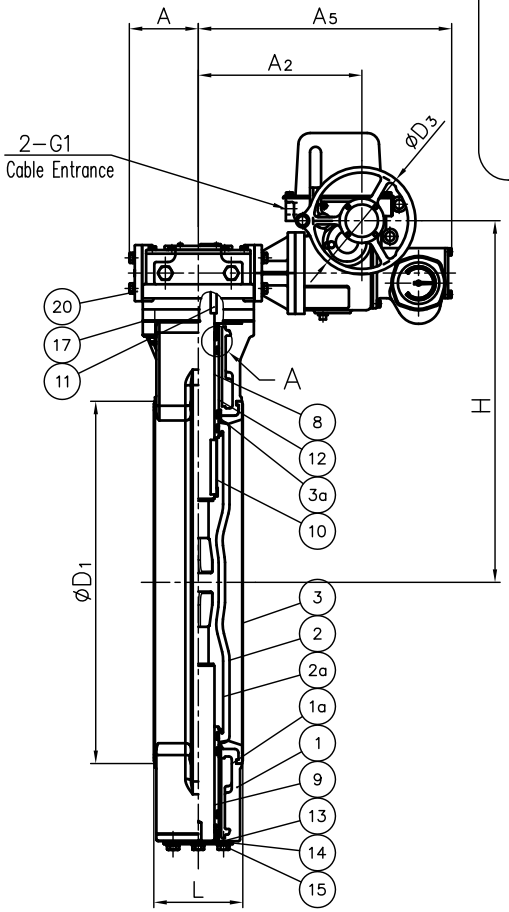

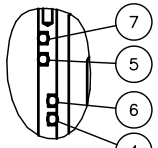

Detaile of Part A

No.	DESCRIPTION	QTY.	MATERIAL	REMARKS
3a	STABILIZATION RING	2	STAINLESS STEEL (SUS304)	
2a	INSERTED METAL OF DISC	1	DUCTILE IRON (FCD450)	
1a	INSERTED METAL OF BODY	1	DUCTILE IRON (FCD450)	
20	ACTUATOR	1	DUCTILE IRON (FCD450)	Tar Epoxy Coat.
18	BOLT (B)	8	STAINLESS STEEL (SUS304)	
17	GASKET (B)	1	NONAS SHEET	
15	BOLT (A)	6	STAINLESS STEEL (SUS304)	
14	STEM HOLDER (A)	1	STAINLESS STEEL (SUS304)	
13	GASKET (A)	1	NONAS SHEET	
12	BUSH	2	BRONZE CAST (BC6)	
11	KEY (B)	1	CORBON STEEL (S45C)	
10	KEY (A)	1	CORBON STEEL (S45C)	
9	STEM (B)	1	STAINLESS STEEL (SUS403)	
8	STEM (A)	1	STAINLESS STEEL (SUS403)	
7	O-RING (D)	1	NBR	
6	O-RING (C)	1	NBR	
5	O-RING (B)	3	EPDM	
4	O-RING (A)	11	EPDM	
3	SEAT	1	EPDM	
2	DISC	1	PDCPD	
1	BODY	1	PDCPD	

ITEM	PDCPD BUTTERFLY VALVE ELECTRIC ACTUATED S TYPE ASS'Y AUTO-RECOVERY TYPE ANSI Class 125・150 28" (700mm) ~40" (1000mm)		
DRAWN	M.Iwakiri	DATE	SCALE
		JUL.23.2018	~
CHECKED	H.Kawano	DRAWING No.	
APPROVED	K.Koushou	RI-AE003AE	4
SPECIAL ORDER No.		ASAHI YUKIZAI CORPORATION	