DIMENSIONS TABLE

UNIT : inch

NOMINAL SIZE		SOCKET END								THREADED END																ACTUATOR MODEL
			PVC,C-PVC				PP,PVDF(IPS)					L														
			ASTM SCH80									PVC C-PVC	PP PVDF													
		d	d1	d1'	l	L	d1	l	L	d2	l			D1	D2	l1 (LIFT)	H	H1	A	A1	A2	S	S1	S2		
½"	15mm	0.63	0.848	0.836	0.875	5.47	0.83	0.87	5.43	½ − 14 NPT	0.59	5.04	5.04	1.89	2.13 × 2.60	0.39	15.98	0.77	3.98	3.19	5.51	0.98	M5	0.39		PSN−1
¾	20	0.79	1.058	1.046	1.000	6.18	1.03	1.00	6.09	¾ − 14 NPT	0.67	5.83	5.83	2.36	2.13 × 2.60	0.39	16.06	0.69	3.98	3.19	5.51	0.98	M5	0.39		PSN−1
1	25	0.98	1.325	1.310	1.125	7.32	1.30	1.13	7.24	1 − 11½ NPT	0.79	6.77	6.77	2.76	2.64 × 3.15	0.47	16.26	0.73	3.98	3.19	5.51	0.98	M5	0.39		PSN−1
1¼	32	1.26	1.670	1.655	1.250	7.95	1.65	1.25	7.80	1¼− 11½ NPT	0.87	7.40	7.40	3.23	2.64 × 3.15	0.47	16.38	0.89	3.98	3.19	5.51	0.98	M5	0.39		PSN−1
1½	40	1.57	1.912	1.894	1.375	10.47	1.89	1.37	10.28	1½− 11½ NPT	0.98	9.65	9.65	3.94	4.25 × 4.25	0.83	18.27	1.08	4.33	3.54	5.91	1.77	M6	0.55		PSN−3
2	50	2.05	2.387	2.369	1.500	11.54	2.36	1.50	11.54	2 − 11½ NPT	1.10	11.06	10.95	4.17	4.84 × 4.84	0.98	18.62	1.42	4.33	3.54	5.91	1.77	M6	0.55		PSN−3

NOTE.
1. Diaphragms except EPDM and PTFE are available in FKM,VIFLON® C (FKM−C) ,VIFLON® F (FKM−F) , CSM and NBR when required.
2. The shape and appearance of assembly differ a little with nominal size compared to this drawing.

SOCKET END

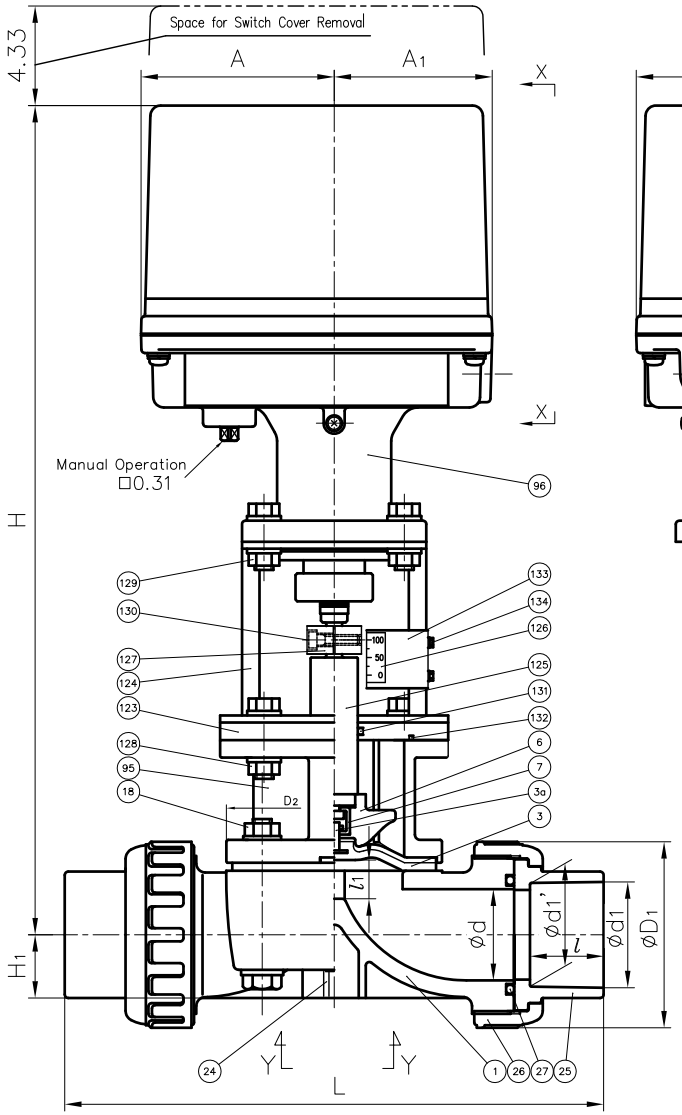

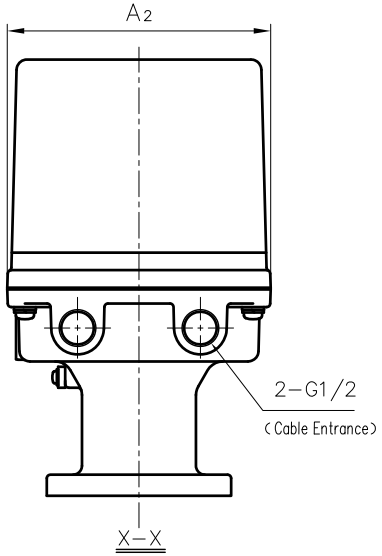

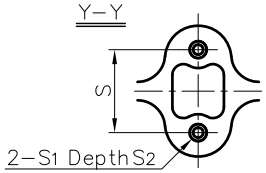

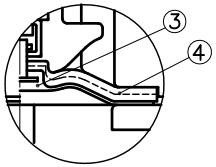

In case material of diaphragm is PTFE

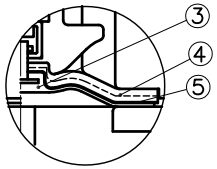

In case material of diaphragm is PTFE with cushion cover

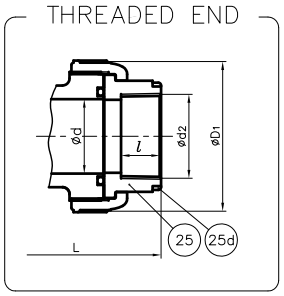

No.	DESCRIPTION	QTY.	MATERIAL	REMARKS
25d	RING	2	STAINLESS STEEL (SUS304)	Used for C−PVC Body. Threaded End :½"−1"
134	SCREW (F)	2	STAINLESS STEEL (SUS304)	
133	INDICATOR PLATE	1	STAINLESS STEEL (SUS304)	
132	O−RING (K)	1	NBR	
131	O−RING (J)	1	NBR	
130	BOLT (F)	2	STAINLESS STEEL (SUS304)	
129	BOLTO・NUT (F)	4Sets	STAINLESS STEEL (SUS304)	
128	BOLTO・NUT (E)	4Sets	STAINLESS STEEL (SUS304)	
127	JOINT	1	COPPER ALLOY (C3604)	
126	INDICATOR SEAL	1	ACRYL	
125	STEM (D)	1	COPPER ALLOY (C3604)	
124	STAND (A)	1	STAINLESS STEEL (SUS304)	
123	SPACER (A)	1	PVC	
96	ACTUATOR	1	ALUMINIUM etc.	Acryl Coat
95	BONNET	1	CAST ALUMINIUM ALLOY (AC4A)	Epoxy Coat
27	O−RING (C)	2	□EPDM □Others ( )	
24	ENSAT FOR BODY	2	COPPER ALLOY (Equal to C3603)	
18	BOLT・NUT (A)	4Sets	STAINLESS STEEL (SUS304)	
7	JOINT	1	STAINLESS STEEL (SUS304)	
6	COMPRESSOR	1	PVDF	
5	CUSHION COVER	1	□Noting □PVDF	Used for PTFE Diaphragm
4	CUSHION	1	EPDM	
3a	INSERTED METAL OF DIAPHRAGM	1	STAINLESS STEEL (SUS304)	
3	DIAPHRAGM	1	□EPDM □PTFE □Others ( )	
26	UNION NUT	2	□PVC □C−PVC □PP	
25	END CONNECTOR			
1	BODY	1	□PVDF	

ITEM	T.U.DIAPHRAGM VALVE (TYPE14) ELECTRIC MODEL TYPE M ASS'Y ANSI : □SOCKET END, □THREADED END ½" (15mm) ~ 2" (50mm) with E−P POSITIONER		
DRAWN	M.Iwakiri	DATE	SCALE
CHECKED	H.Kawano	AUG.20.2019	~
APPROVED	K.Koushou	DRAWING No. T1−AE002AE	△
SPECIAL ORDER No.		ASAHI YUKIZAI CORPORATION	